GAZEBO STRUCTURAL SYSTEM
SERIES VKE- 11B MODEL
(11' x 15', Double-Tier)

Elongated CUPOLA
solid base
(electrical *optional*)

Lumber:
Western Red CEDAR #1 (Cabinet)
or #D and Better (Carpentry)
Shingles:
5X / 16" long / 1/2" thick
or 16 oz. copper

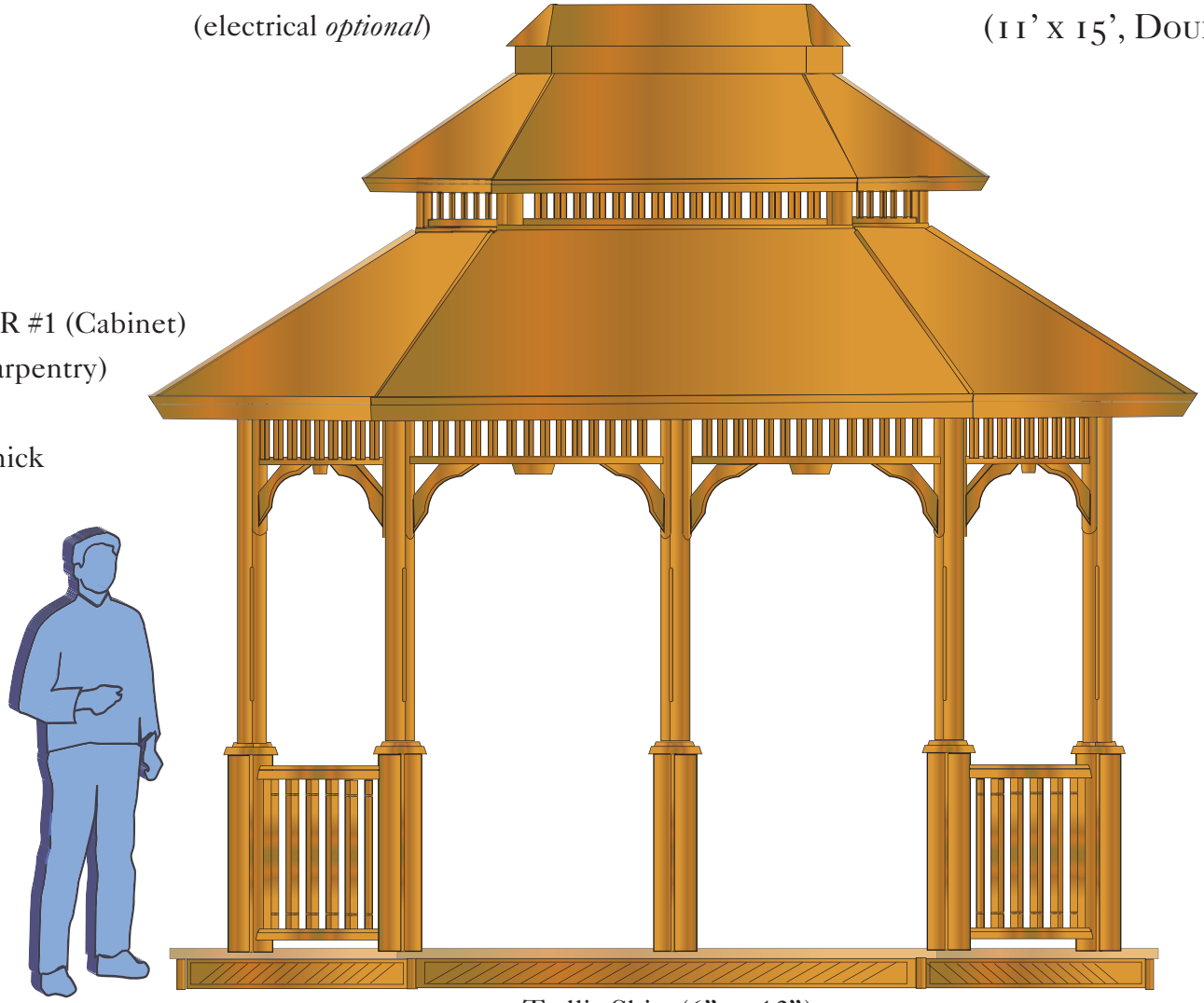

Trellis Skirt (6" or 12")

Vixen Hill Cedar Products
P.O.Box 389 - Elverson, PA 19520
800-423-2766

Created by: Andrea Beringer Date: Jan 2015

Model: VKE-11B

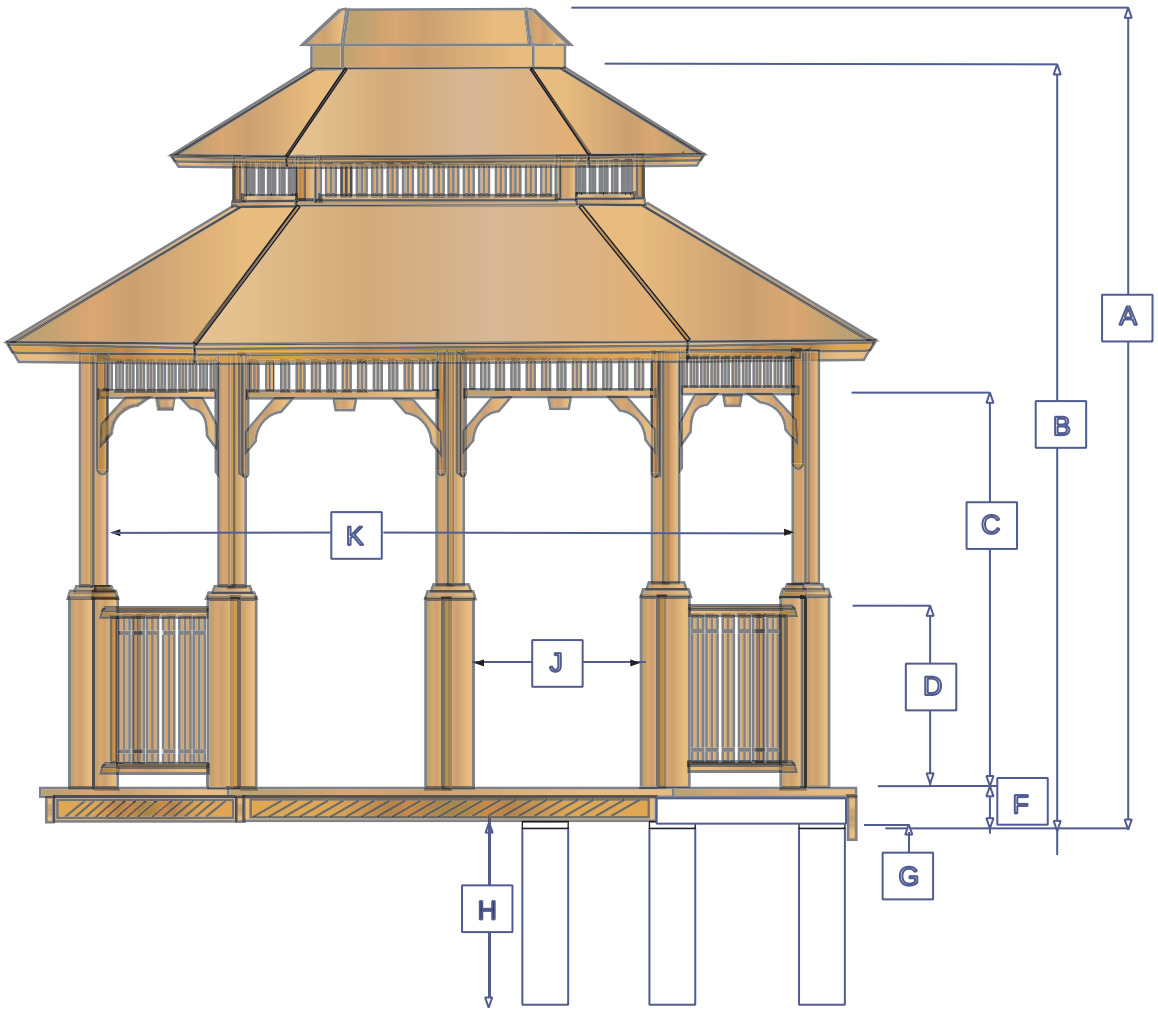

SIZE & DIMENSIONS

Key: Based on roof type	11' x 15' B
*A: Height, Overall	153"
B: Height, Grade/peak	143"
C: Height, Entrance Max.	79"
D: Height, Railing	30"
F: Height, grade/floor	8"
*G: Height, piling-exp.	1"
H: Height, piling-overall	37"
J: Width, Entrance	43"
K: Width, Interior Length	164"
M: Width, Point to Point	181 3/4"
N: Width, Flat to Flat	133"
O: Length, Side	55"
O(2): Elongated Length, Side	103 3/4"
**P: Radius, Piling Cntrs.	62 3/4"
Q: Spread, Piling Cntrs.	48"
R: Elongated Part of Center	24 3/8"
S: Elongated Outer to Center	82 3/8"
*G Measure Based on 6 Inch Trellis	

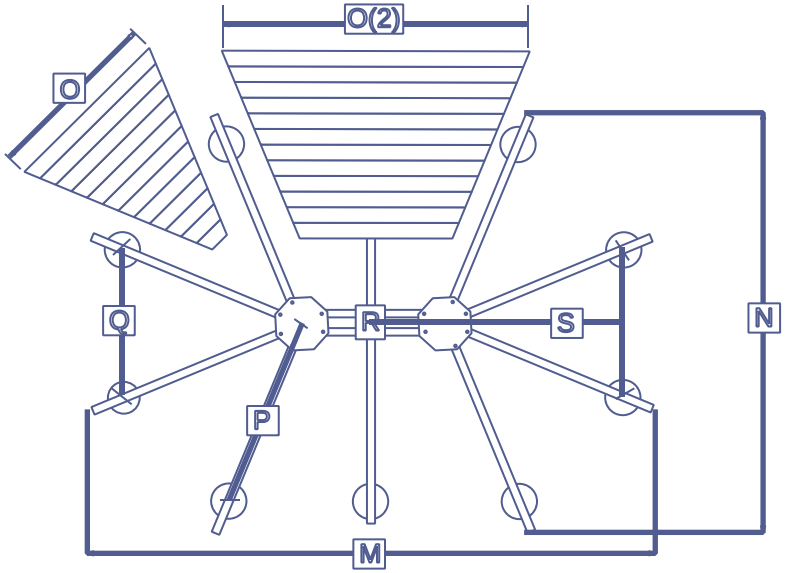

VIXEN HILL CEDAR PRODUCTS
P.O.Box 389 - Elverson, PA 19520
800-423-2766

Created by: Andrea Beringer Date: Jan 2015 Model: VKE-11B

FRET MODULE CONSTRUCTION

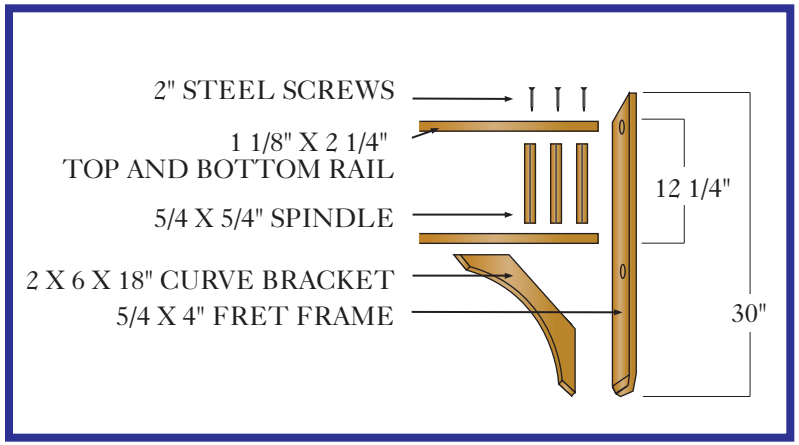

FRET & RAIL CONNECTION

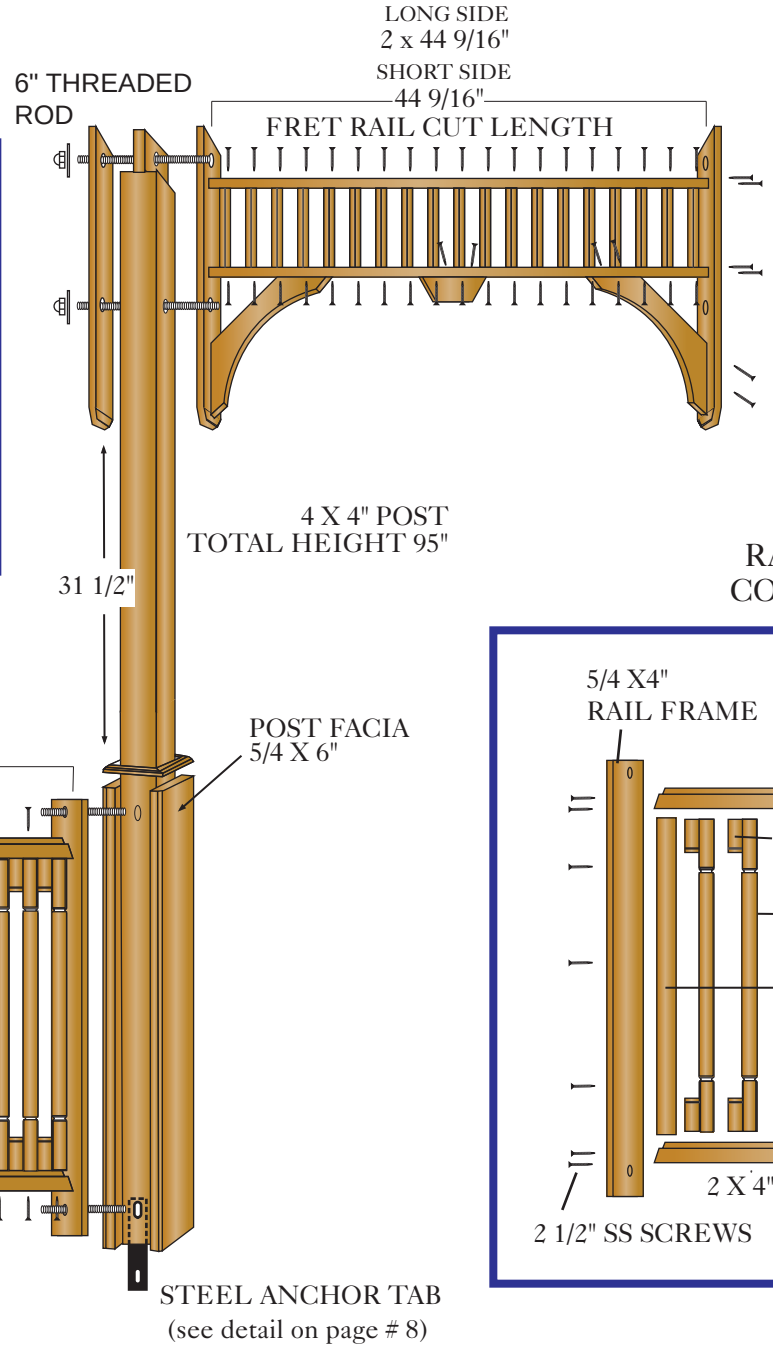

RAIL MODULE CONSTRUCTION

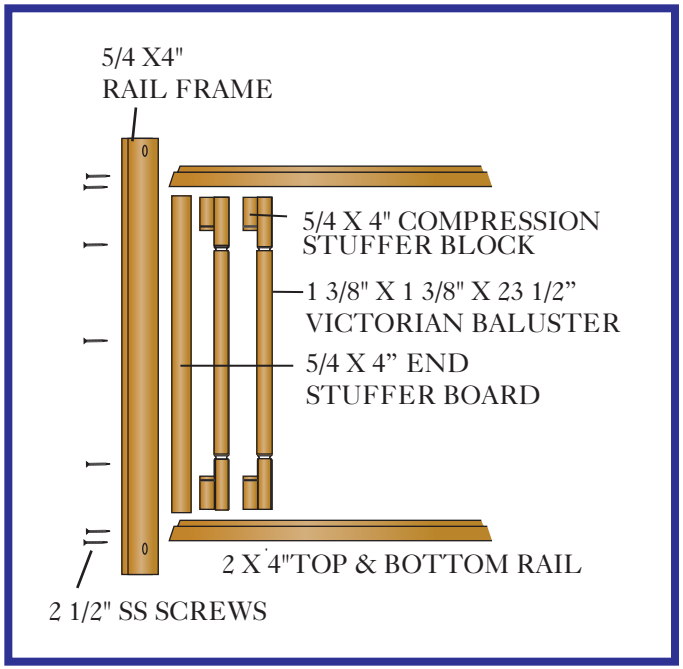

VIXEN HILL CEDAR PRODUCTS
P.O.Box 389 - Elverson, PA 19520
800-423-2766

Created by: Andrea Beringer Date: Jan 2015

Drawing: 3 of 9
Model: 11' x 15'

Electrical Post Option

(standard for VK / QA Cabinet Grade, optional for all others)

Additional Options:
Outlet posts (dual)
Fan Control post (fan/light)
Channel Posts (for custom wiring)

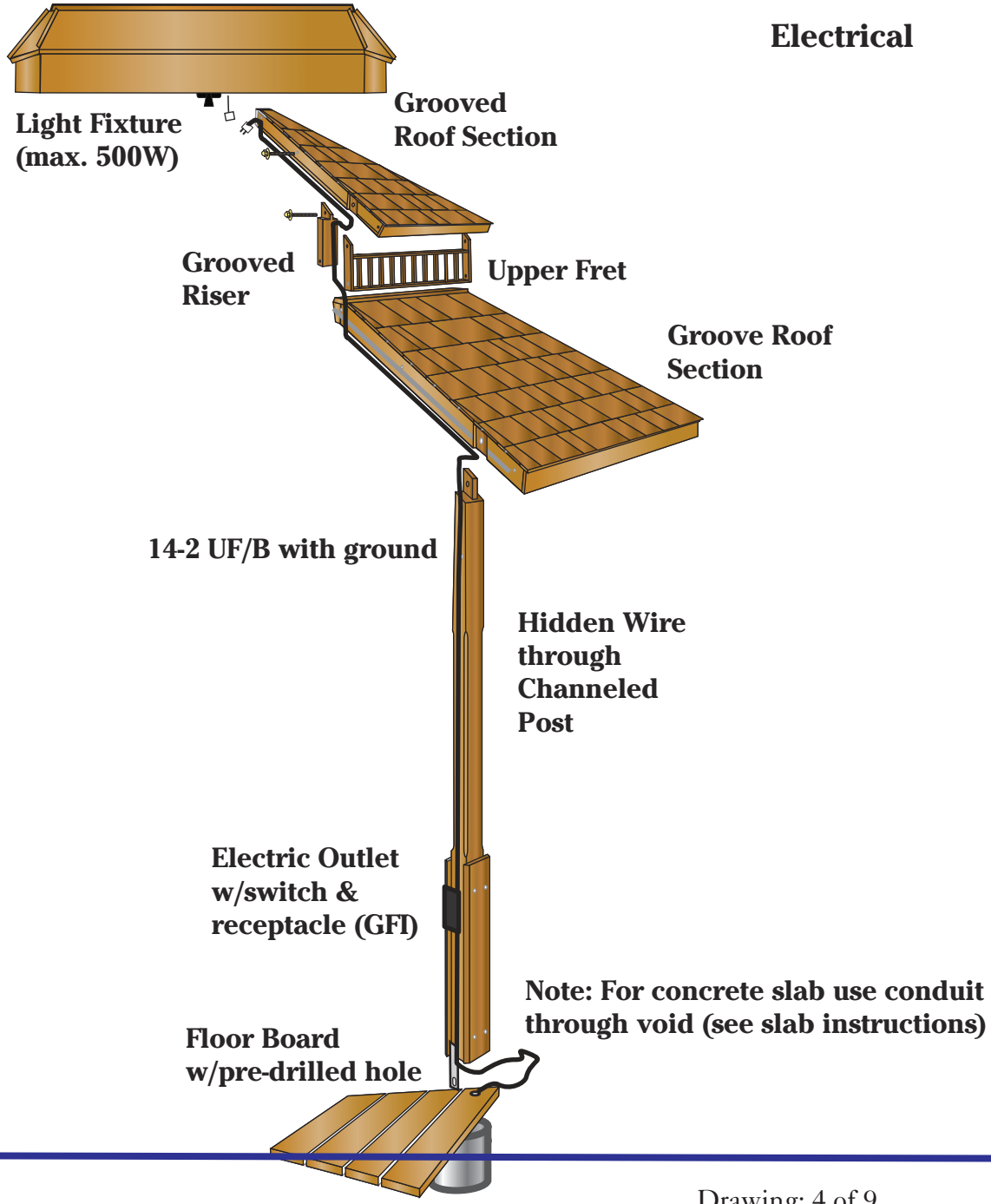

Vixen Hill Cedar Products
P.O.Box 389 - Elverson, PA 19520
800-423-2766

Created by: Andrea Beringer Date: Jan 2015

LOWER TIER
ROOF CONSTRUCTION

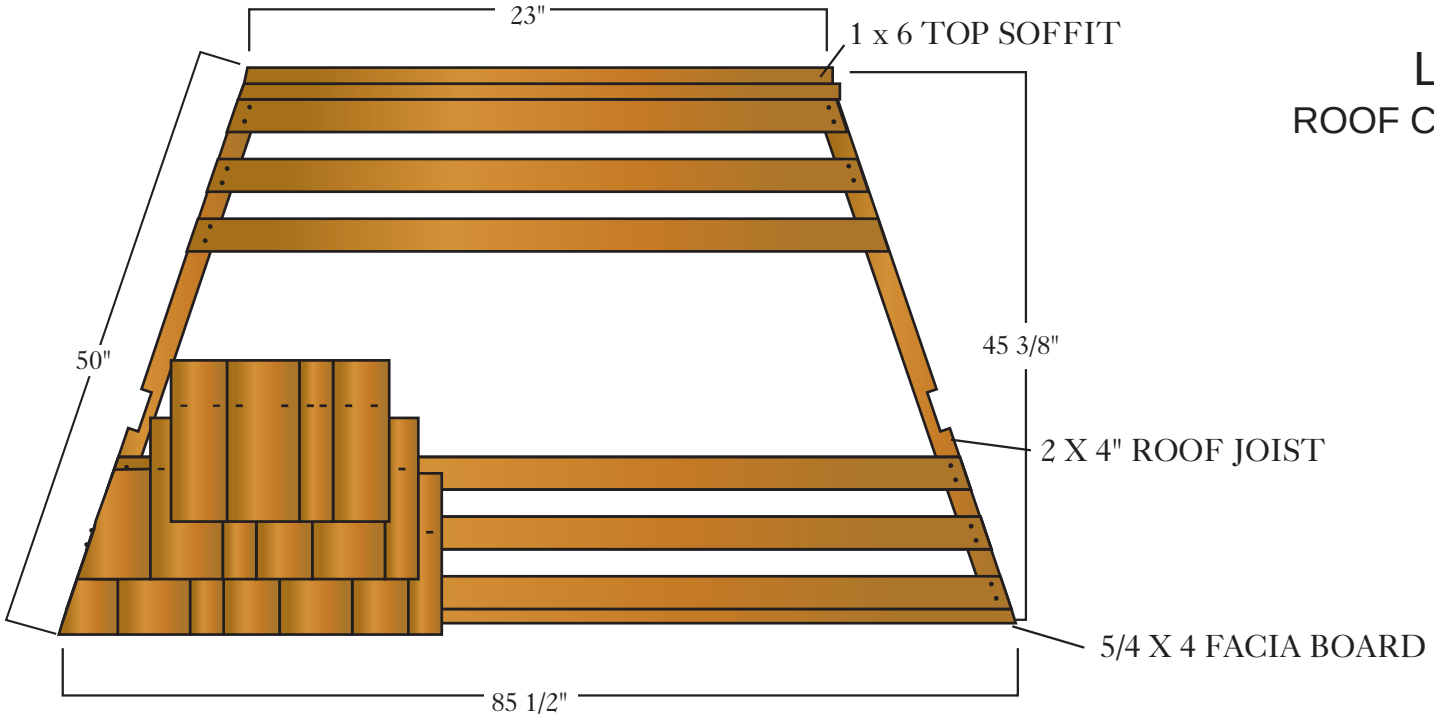

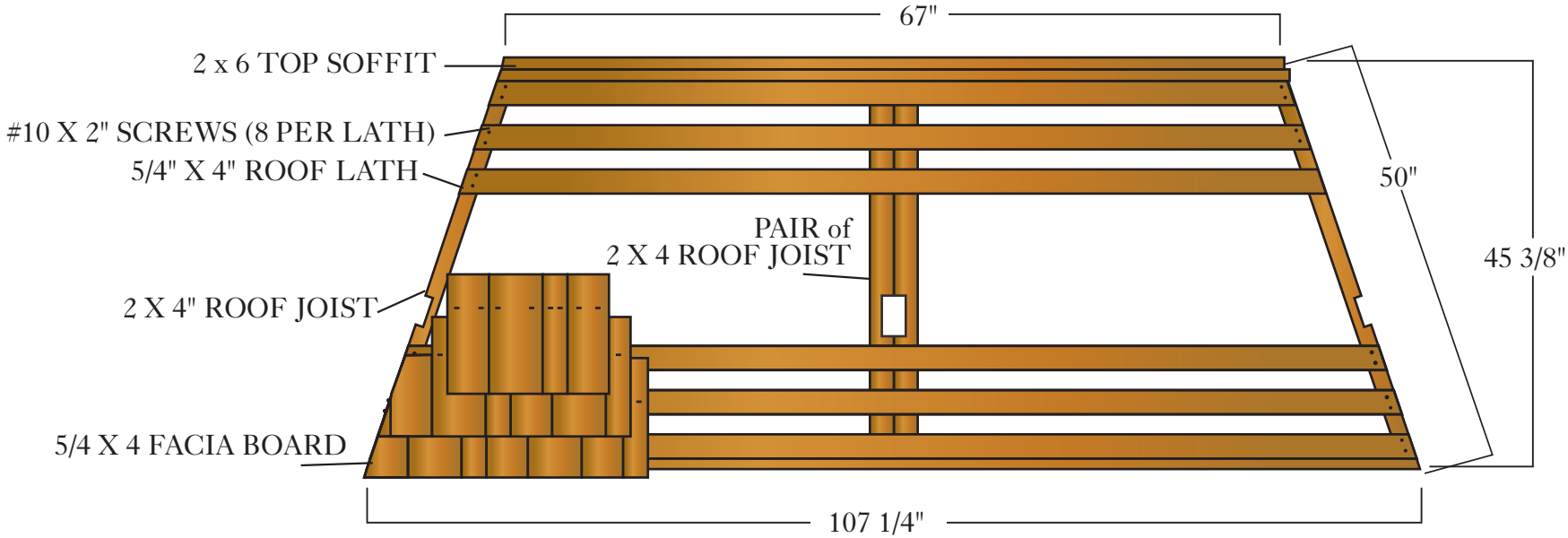

VIXEN HILL CEDAR PRODUCTS
P.O.Box 389 - Elverson, PA 19520
800-423-2766

Created by: Andrea Beringer Date: Jan 2015

Drawing: 6 of 9
Model: VKE-11B

UPPER TIER
ROOF CONSTRUCTION

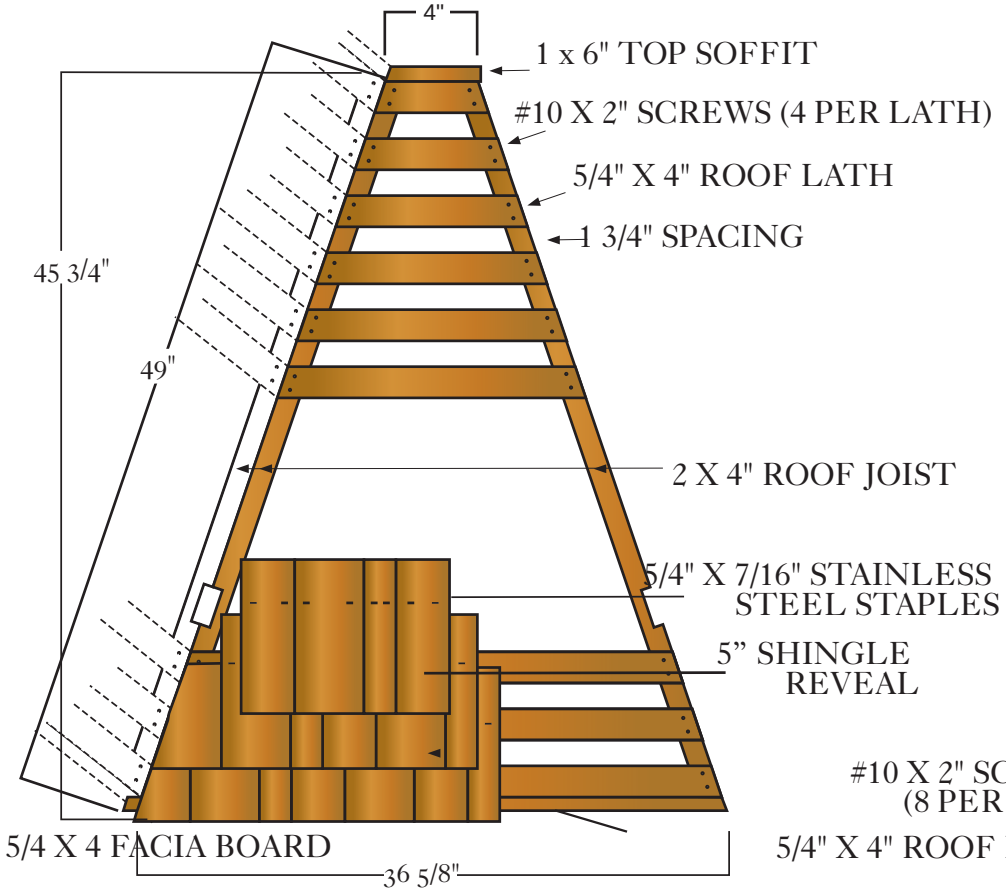

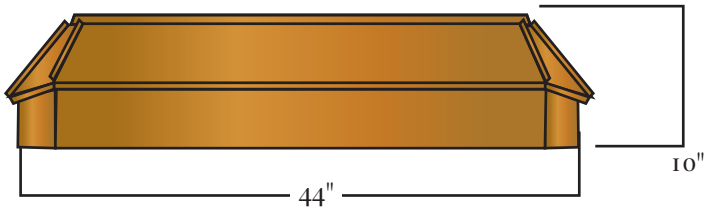

THE CUPOLA IS CONNECTED WITH STAINLESS STEEL SCREW FROM THE UNDER SIDE OF THE ROOF LATH.

CEDAR SHINGLE OR 16 OZ. COPPER

ELONGATED UPPER ROOF MODULE

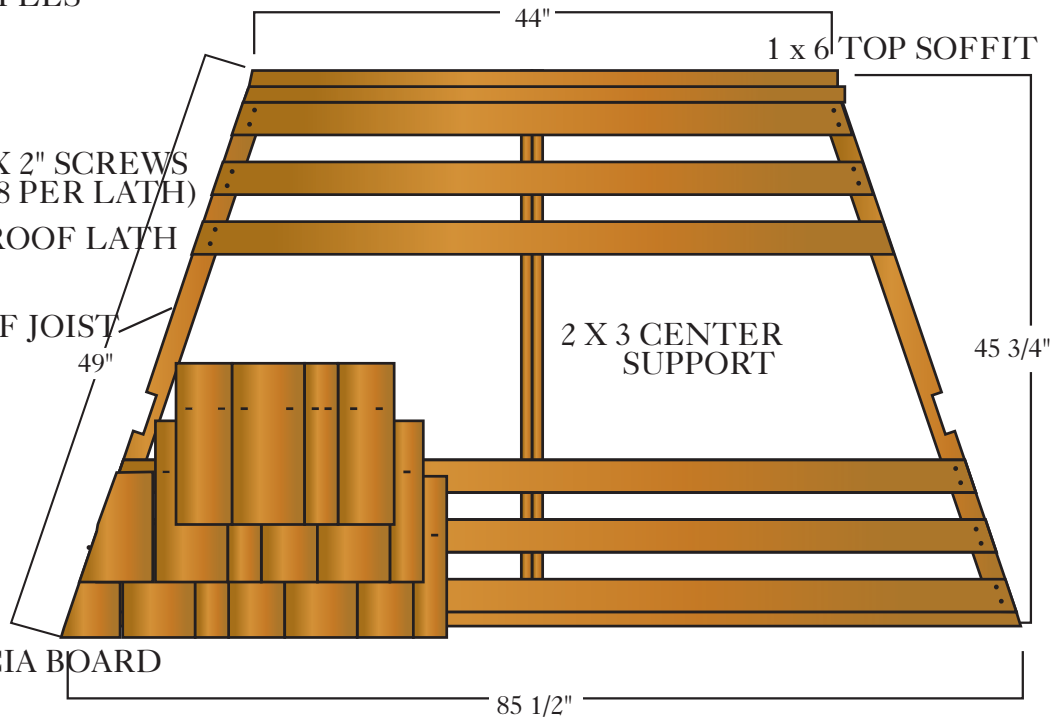

SHORT & LONG UPPER FRET

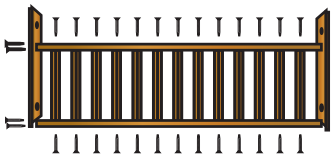

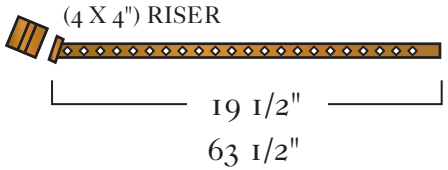

(5/4 X 5/4") SPINDLE (1 1/8" X 2 1/4") RAIL
(5/4 X 4") FRET FRAME
#10 X 2" SCREWS

VIXEN HILL CEDAR PRODUCTS
P.O.Box 389 - Elverson, PA 19520
800-423-2766

Created by: Andrea Beringer Date: Jan 2015

Model: VKE-11B

ROOF TO POST MORTICE CONNECTION

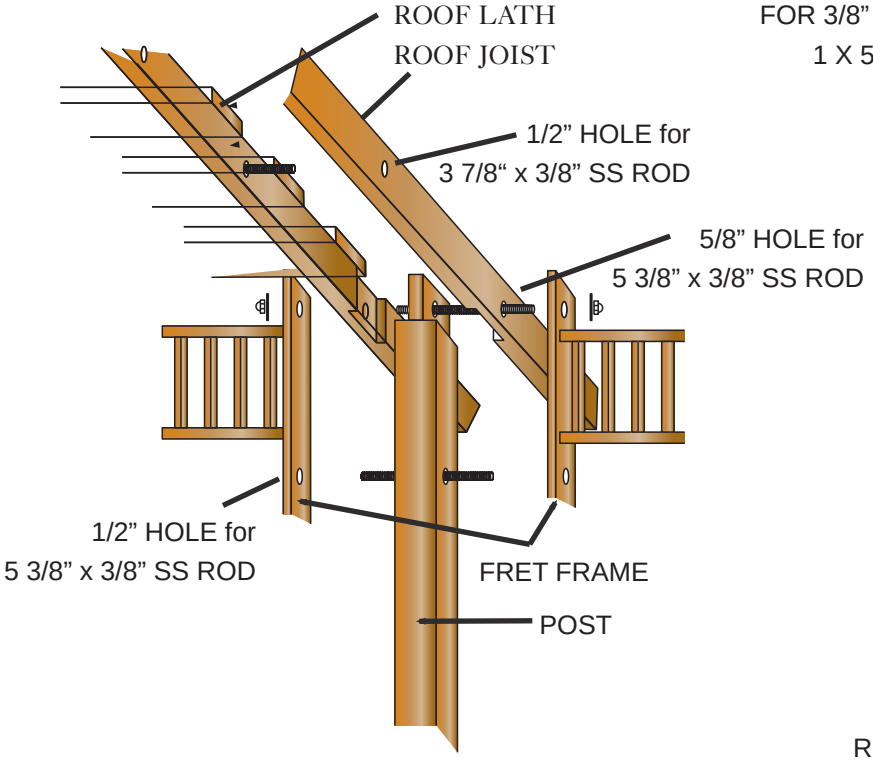

ROOF ATTACHMENT

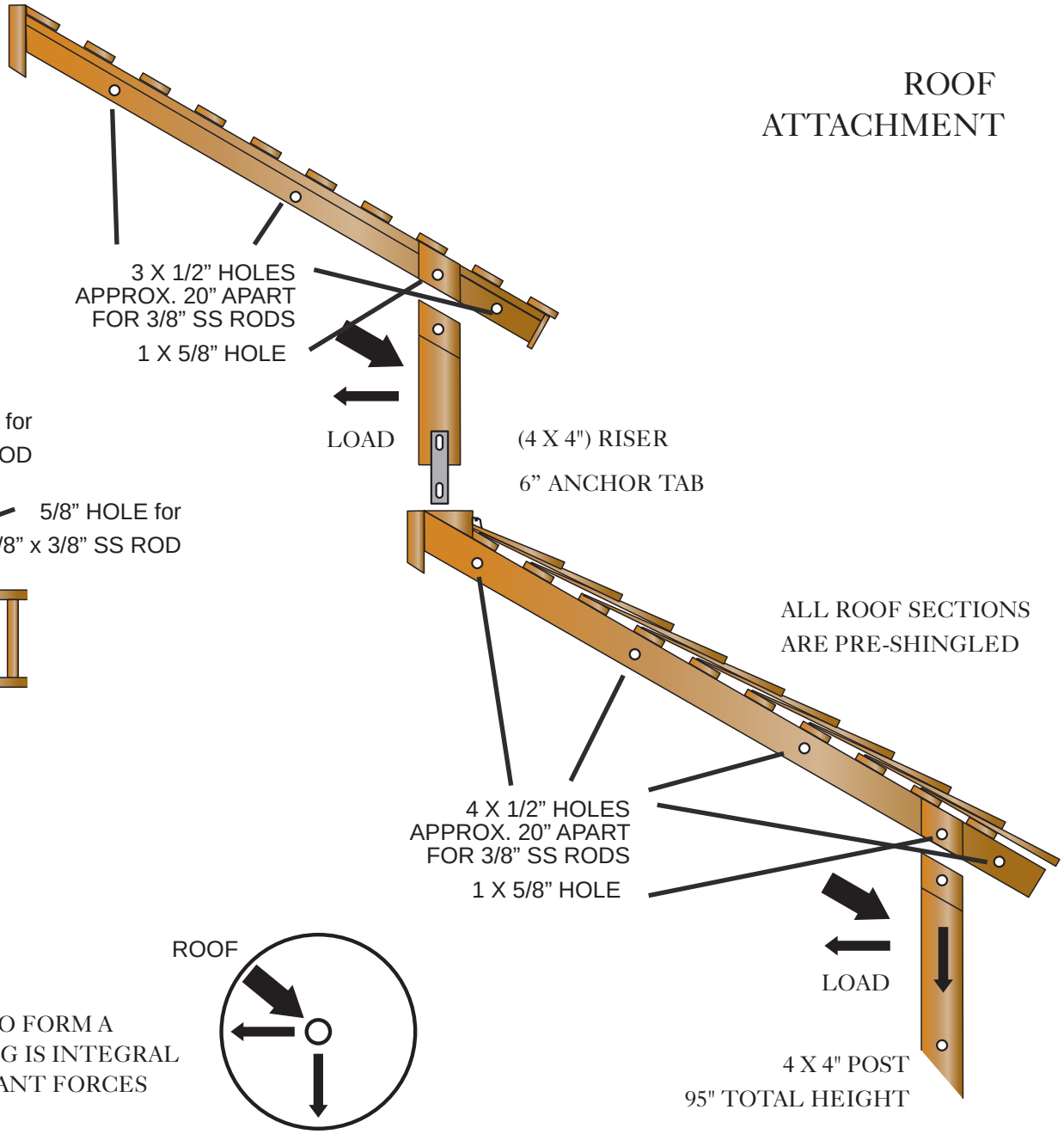

ROOF SYSTEM
RIDGED TRIANGULAR MODULES CONNECT TO FORM A CONIC ROOF SYSTEM. THE COMPRESSION RING IS INTEGRAL TO THE CONIC DESIGN AND ALLOWS RESULTANT FORCES TO BE PERPENDICULAR TO GRADE.

VIXEN HILL CEDAR PRODUCTS
P.O.Box 389 - Elverson, PA 19520
800-423-2766

Created by: Andrea Beringer Date: Jan 2015

Model: VKE-11B

FLOOR CONNECTIONS

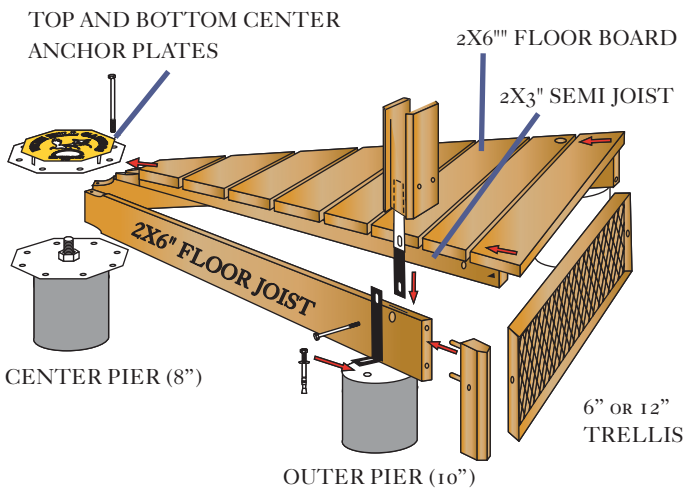

UNDER-SIDE OF FLOOR SECTION

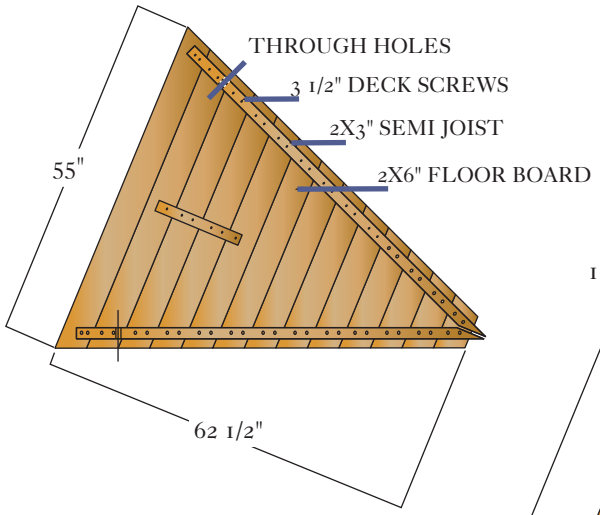

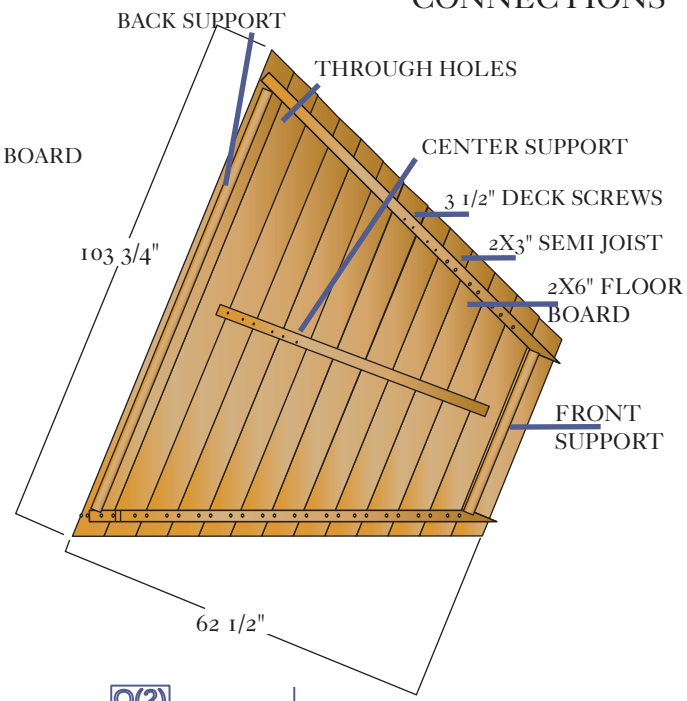

END VIEW OF FLOOR ANCHORING

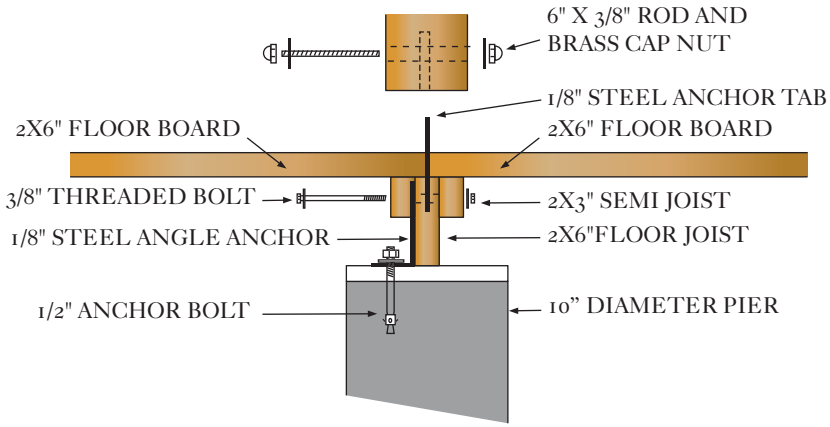

PILING LAYOUT

(SEE DETAIL ON PG #2)

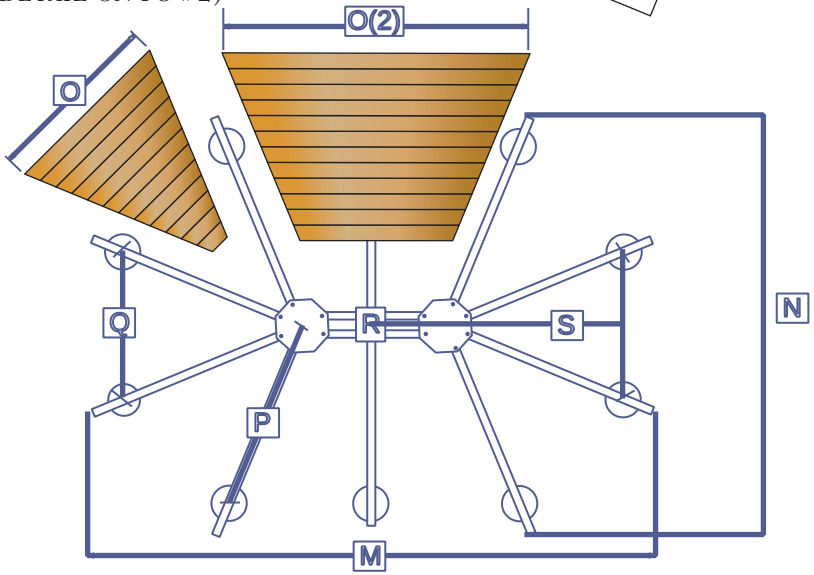

VIXEN HILL CEDAR PRODUCTS
P.O.Box 389 - Elverson, PA 19520
800-423-2766

Created by: Andrea Beringer Date: Jan 2015

Drawing: 7 of 9
Model: 11' x 15'

Specifications for the CARPENTRY & CABINET models (8 x 11' , 11 x 15' x 14 x 19')

Part 1 General

1.1 Scope. The contractor shall furnish and install a wooden gazebo as shown on plans and herein specified as supplied by Vixen Hill Mfg. Co. Inc., of Elverson, PA 19520.

Part 2 Product

2.1 Wood Materials. Gazebos for CARPENTRY shall be fabricated from air-dried, sound tight-knot (STK) or better and for CABINET shall be fabricated from Air-Dried, #1 old growth & rot resistant western red cedar. All wood shall be grain selected during in-house milling for best application and safe use. Wood for CARPENTRY shall contain loose or open knots limited to less than 25% of material used.

2.2 Roofing System. Shingles shall be of or equal to #1 perfection clear heart cedar and per the following specifications 5X, 16" long, 1/2" thick, tapered. Roof lath shall be of no less than net finished size 1x3" with a 5" spacing. Roof sections shall be completely pre-assembled and pre-cut, and joints between roof sections shall be self-sealing to preclude capping. Caulk is recommended to be used at the roof joist.

2.3 Surface Finish. All wood members shall be surfaced four sides. Surfaces displaying planer skips or saw marks after dressing shall be limited to less than 25% of shown faces. Hand contact edges may be rounded, chamfered, or edge-shaped free of splinters and smooth to the touch. All exposed surfaces shall be prepared for maximum acceptance of oil-based finishes (optional with additional cost).

2.4 Hardware. All assembly & Anchoring hardware shall be provided. All assembly hardware in view shall be of Stainless Steel (cap nuts & washers) and of a finish type to conceal all threads. Concealed assembly hardware shall be of galvanized steel for CARPENTRY and stainless steel for CABINET grade (threaded rods). All hardware in ground contact shall be of galvanized steel for CARPENTRY and stainless steel for CABINET grade. No nails shall be required or provided.

2.5 Electrical. Standard for CABINET and optional for CARPENTRY grade. The pre-wired post provides 110V electrical service through wire (14-2 UF/B with ground). The post has an electrical box with (GFI) receptacle and light switch. The light fixture is screwed inside the cupola for up to 500W strength. Wires shall be hidden within the component parts through grooved roof section and channeled post. All electrical components shall be UL approved.

2.6 Connections & Anchoring. Factory module construction shall include pocket joints and stainless steel threaded fasteners. On-site interconnection of modules shall be achieved using threaded rods and stainless or brass cap nuts and washers. Anchoring shall be concealed and appropriate to the surface mounting material. Only simple hand tools shall be required for assembly.

2.7 Engineering. Design of connections and materials used shall be such as to adhere to structural requirements of major building codes. Drawings and representative engineering shall be available from the manufacturer for the purpose of permits or architectural review.

Part 3 Execution

3.1 Prefabrication. All component parts shall be pre-assembled to the fullest extent possible, to preclude any on-site drilling, cutting, filling, nailing or sanding. All prefabrication fasteners shall be hidden from view or channeled and stripped with matching wood where visible.

3.2 Installation. The gazebo kit shall be supplied with all necessary hardware, shop drawings and complete instructions to provide for efficient on-site assembly. Average assembly time on a prepared foundation shall not exceed 15 man-hours.

Vixen Hill Cedar Products
P.O.Box 389 - Elverson, PA 19520
800-423-2766

Drawing #:

Created by: Andrea Beringer Date: Jan 2015 Model: Elongated Gazebos